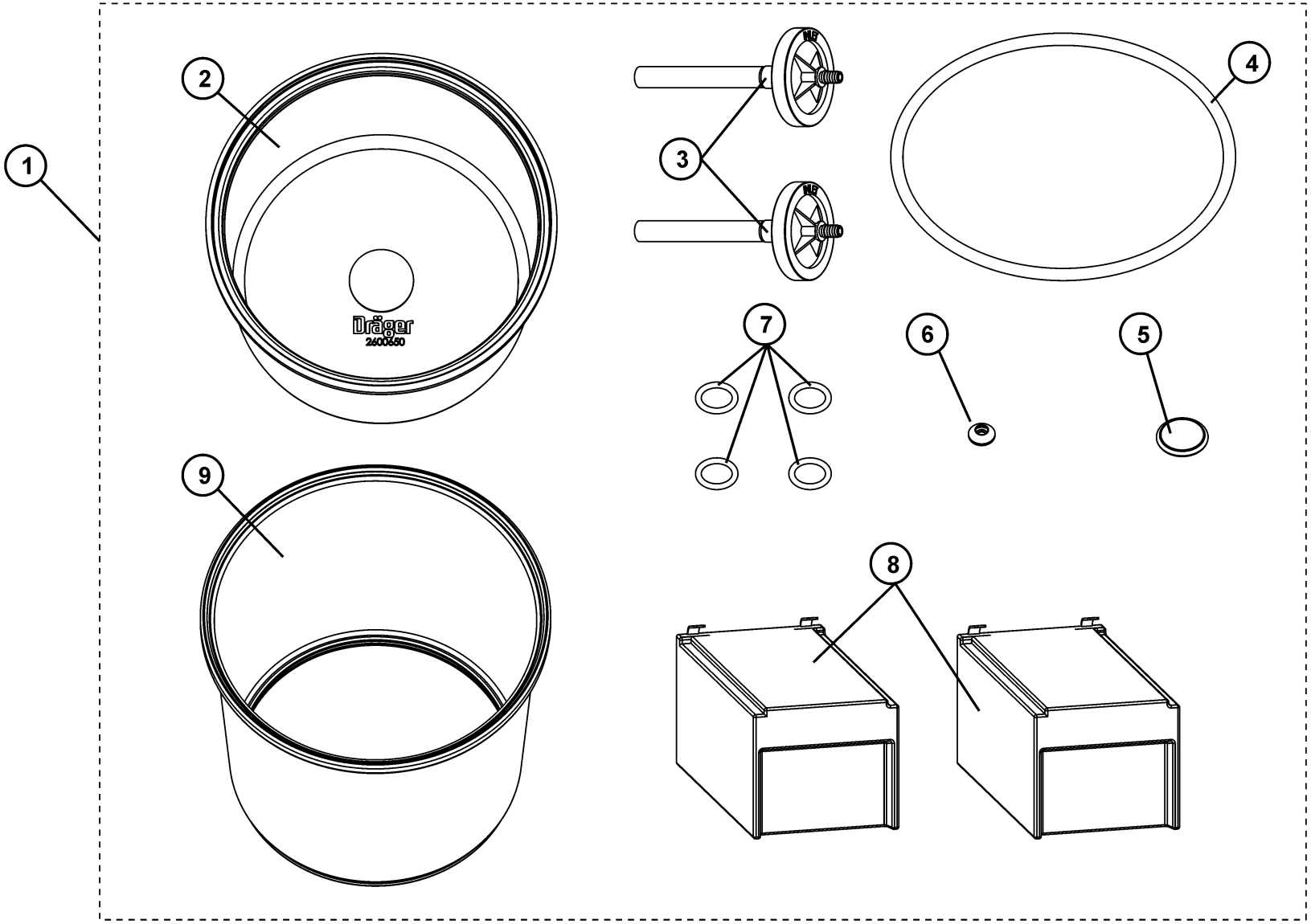
1
2
Dräger
2600850
3
4
5
6
7
8
9

Pos	Part No	Description	Unit	Remark	Price	Status	Page	Returnable	diagnose	End ofService	Order No
1	MX08153	Fabius GS ServSet (3 year)	St	Set kompl.	356,51			Yes		00000000	MX08153
2	2600650	Diaphragm, cup	St		86,08					29991231	2600650
3	8402868	BACTERIA FILTER	St		28,60					29991231	8402868
4	8604831	O-RING 105 x 4	St		4,38					29991231	8604831
5	1866249	Batterie,Lithium 3V/260mAh	St		3,46					29991231	1866249
6	8404065	GASKET	St		7,86					29991231	8404065
7	U04314	O-RING SEAL	St		0,97					29991231	U04314
8	1841416	Lead-acid battery 12V/3.5AH	St		61,87					29991231	1841416
9	2600651	Diaphragm, Pisten	St		105,90			Yes		00000000	2600651